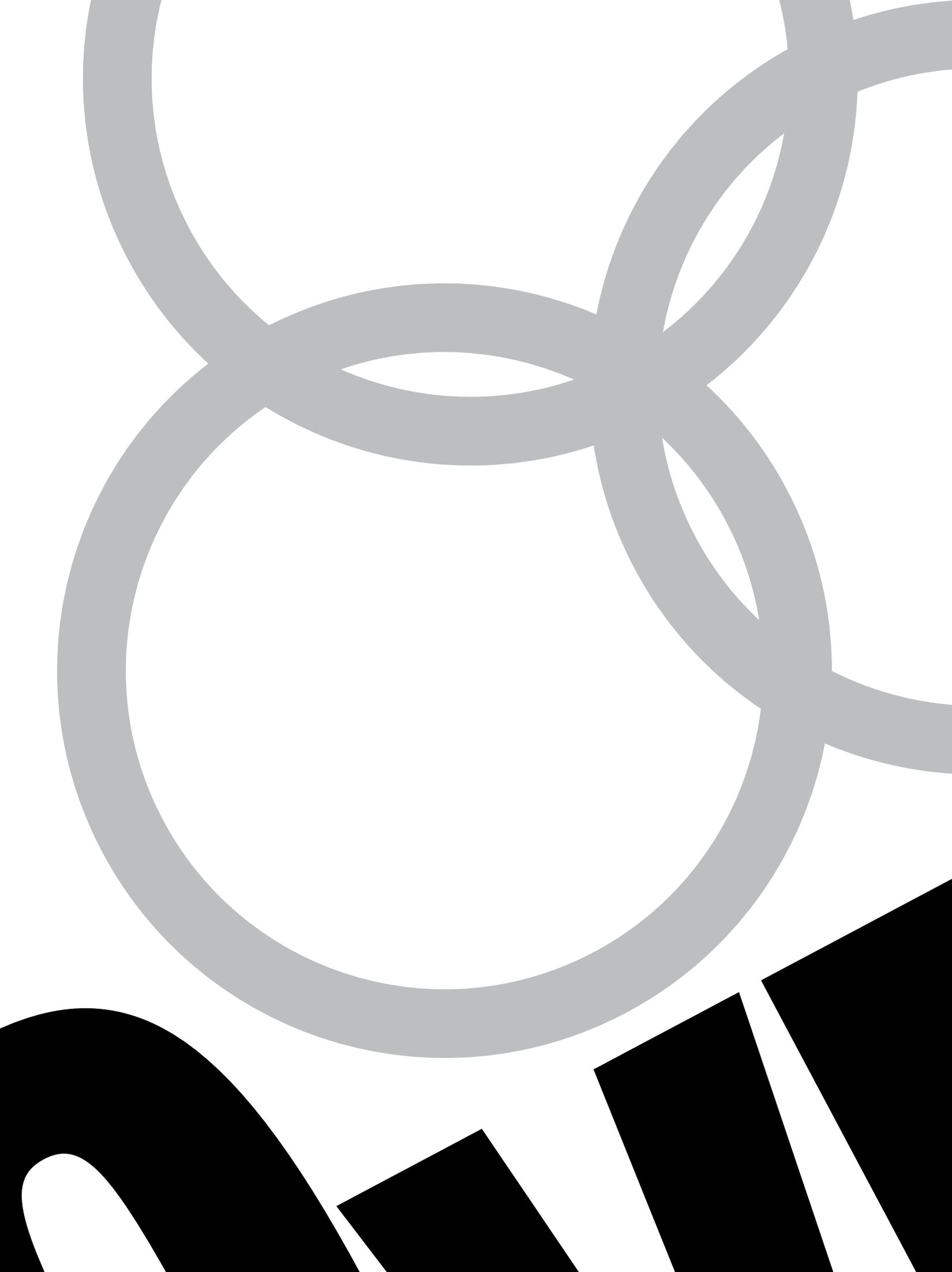

NBS4 SERIES

SUBMERSIBLE MOTORS 4" OIL-FILLED

TECHNICAL DETAILS

NBS4 PRODUCT INTRODUCTION

The NBS4 submersible motors are 4" rewindable submersible motors which are suitable for water wells which max. temperature is 30°C and which pH is between 6.5 and 8.0. The filling liquid is a non-toxic dielectric fluid, which is approved by the F.D.A. (Food and Drug Administration) as well as by other various institutes of pharmacology world-wide. The coupling dimensions and flange comply with NEMA 4" standards, as these submersible motors are designed for driving 4" borehole (deep well) submersible pumps that are in accordance with 4" NEMA standards. Usually the submersible motors are installed vertically. However, the motors may be installed horizontally provided technical approval for each specific application. The 4" submersible motors can be installed in boreholes up to 150 m deep. Rewind ability is assured by a design which enables the easy dismantling and assembly of the motors.

APPLICATION

These motors are built for dependable operation in 4" diameter or larger water wells. Oil lubricated thrust and radial bearings enable a maintenance free operation. A special diaphragm ensures pressure compensation inside the motor.

PRODUCT ADVANTAGES

- Stator refrigerated in dielectric non –toxic oil bath
- Cable material according to drinking water regulation
- Sand slinger and shaft seal for high performance in sand
- High efficiency electrical design for low operation cost
- All motors prefilled and 100% tested

SPECIFICATION STANDARD

- 0,37 - 7,5 kW
- 4" NEMA flange
- Protection: IP 68
- Starts per hour: 30
- Installation: vertical/horizontal (approuval needed)
- Standard voltage: 220-230V/50 Hz ;380-415V / 50Hz, 460V / 60Hz
- Voltage tolerance: ± 10%
- Cable dimensions: 4 x 1.5 mm^2
- Singlephase:PSC type
- Motor protection: Select thermal overloads according to DIN 60947-4-1, trip class 10 or 10A,trip time < 10 s. at 5 x IN
- Insulation: Class F
- Rated ambient temperature: 30°C
- Cooling flow: min. 8 cm/sec
- Water pH:6.5-8
- Thrust rating:1500 N, 2500 N, 4500 N(K)

SINGLE-PHASE

PERFORMANCE DATA V 220-230 Hz 50

Power		Hz	Voltage	RIA(*)	LRC / RLC	R.p.m.	FLT	LRT / FLT	BDT / FLT	Efficiency η%			Power factor cosφ			Capacitor
KW	HP		V			Min-1	Nm			50	75	100	50	75	100	µF
0.37	0.50	50	220	3.5	2.9	2815	1.26	1.06	2.4	33	42	49	0.93	0.96	0.98	20
			230	3.6	3.0	2830	1.25	1.17	2.6	30	40	47	0.88	0.92	0.95	
0.55	0.75	50	220	4.6	3.0	2810	1.87	0.91	2.2	39	49	55	0.95	0.97	0.99	25
			230	4.6	3.1	2830	2.86	1.02	2.5	36	47	54	0.90	0.94	0.98	
0.75	1.0	50	220	5.8	3.2	2800	2.55	0.90	2.1	44	54	60	0.94	0.97	0.98	36
			230	5.9	3.3	2820	2.54	0.99	2.3	41	52	59	0.88	0.94	0.97	
1.1	1.5	50	220	8.2	3.1	2810	3.74	0.75	2.0	48	58	64	0.82	0.90	0.95	40
			230	8.6	3.1	2825	3,74	0.82	2.2	44	54	62	0.72	0.82	0.90	
1.5	2.0	50	220	10.4	3.2	2790	5.13	0.72	2.6	53	62	68	0.86	0.93	0.97	50
			230	10.6	3.2	2810	5.09	0.80	2.6	49	60	66	0.74	0.85	0.93	
2.2	3.0	50	220	14.7	3.8	2810	7.50	0.70	2.3	54	64	69	0.93	0.97	0.99	76
			230	14.6	4.1	2820	7.51	0.77	2.5	51	62	68	0.84	0.93	0.97	
3.7	5.0	50	220	22.5	4.2	2880	12.2	0.83	2.5	62	71	75	0.96	0.98	0.99	130+
			230	22.0	4.2	2890	12.2	0.84	2.5	59	68	74	0.90	0.95	0.98	156-200

PERFORMANCE DATA V 230-240 Hz 50

Power		Hz	Voltage	RIA(*)	LRC / RLC	R.p.m.	FLT	LRT / FLT	BDT / FLT	Efficiency η%			Power factor cosφ			Capacitor
KW	HP		V			Min-1	Nm			50	75	100	50	75	100	µF
0.37	0.50	50	230	3.4	2.9	2800	1.26	1.07	2.4	32	42	49	0.93	0.96	0.98	20
			240	3.5	3.0	2815	1.26	1.15	2.6	30	39	47	0.87	0.92	0.96	
0.55	0.75	50	230	4.4	3.1	2800	1.87	0.92	2.3	39	49	56	0.96	0.98	0.99	25
			240	4.4	3.2	2815	1.86	1.02	2.4	37	47	55	0.91	0.96	0.98	
0.75	1.0	50	230	5.7	2.4	2800	2.56	0.72	2.2	43	54	60	0.96	0.98	0.99	36
			240	5.6	2.4	2820	2.54	0.78	2.4	41	51	59	0.90	0.95	0.98	
1.1	1.5	50	230	8.1	3.1	2790	3.79	0.73	1.9	47	57	63	0.82	0.91	0.96	40
			240	8.3	3.0	2810	3,75	0.79	2.2	44	54	61	0.75	0.85	0.92	
1.5	2.0	50	230	10.2	3.3	2790	5.13	0.71	2.8	51	61	67	0.83	0.91	0.96	50
			240	10.5	3.2	2800	5.10	0.76	3.1	48	59	65	0.74	0.84	0.92	
2.2	3.0	50	230	13.8	3.6	2820	7.47	0.74	2.3	55	65	71	0.91	0.97	0.98	76
			240	14.0	3.6	2830	7.41	0.82	2.5	51	61	68	0.83	0.91	0.97	
3.7	5.0	50	230	22.6	4.2	2900	12.2	0.82	2.3	56	67	73	0.93	0.97	0.99	130+
			240	22.6	4.3	2910	12.2	0.91	2.4	52	63	71	0.85	0.92	0.97	156-200

PERFORMANCE DATA V 220-230 Hz 60

Power		Hz	Voltage	RIA(*)	LRC / RLC	R.p.m.	FLT	LRT / FLT	BDT / FLT	Efficiency η%			Power factor cosφ			Capacitor	S.F. Amp
KW	HP		V			Min-1	Nm			50	75	100	50	75	100	µF	
0.37	0.50	60	220	3.7	3.9	3460	1.01	1.19	3.4	32	42	48	0.89	0.93	0.95	20	4.7
			230	3.9	3.8	3470	1.02	1.34	3.6	30	40	46	0.82	0.87	0.91	20	4.7
0.55	0.75	60	220	5.0	3.9	3450	1.52	1.35	3.2	34	44	52	0.97	0.98	0.99	31.5	6.3
			230	5.1	4.0	3460	1.51	1.51	3.4	32	42	50	0.92	0.95	0.97	31.5	6.2
0.75	1.0	60	220	6.2	4.1	3460	2.06	0.96	2.8	41	51	58	0.90	0.94	0.97	31.5	7.6
			230	6.4	4.0	3470	2.06	1.06	3.2	38	48	55	0.81	0.87	0.93	31.5	7.6
1.1	1.5	60	220	8.1	3.9	3440	3.05	0.77	2.4	49	59	65	0.88	0.93	0.96	40	9.7
			230	8.3	4.0	3460	3.04	0.87	2.7	43	54	63	0.79	0.86	0.93	40	9.6
1.5	2.0	60	220	10.5	3.9	3420	4.20	0.81	3.6	51	61	67	0.96	0.98	0.99	50	12.5
			230	10.4	4.0	3440	4.20	0.90	4.3	48	58	66	0.90	0.95	0.98	50	12.3
2.2	3.0	60	220	14.9	4.5	3440	6.10	0.74	3.7	55	64	70	0.93	0.96	0.98	76	16.5
			230	15.0	4.5	3460	6.10	0.82	3.7	51	62	68	0.84	0.91	0.95	76	16.4
3.7	5.0	60	220	30.8	3.1	3480	10.1	1.12	2.1	41	52	60	0.85	0.88	0.92	150+	32.9
			230	30.3	3.3	3460	10.0	1.24	2.1	40	50	58	0.85	0.88	0.91	(156-200)	32.4

THREE-PHASE

PERFORMANCE DATA V 380-415 Hz 50

Rating		Hz	Voltage	RIA(*)	LRC / RLC	R.p.m.	FLT	LRT / FLT	BDT / FLT	Efficiency η%			Power factor cosφ		
KW	HP		V			Min-1	Nm			50	75	100	50	75	100
0.37	0.50	50	380	1.35	3.5	2790	1.26	1.7	2.5	40	47	51	0.69	0.77	0.83
			400	1.35	3.7	2820	1.25	1.9	2.7	39	47	51	0.64	0.73	0.79
			415	1.35	3.9	2835	1.25	2.0	3.1	38	46	50	0.61	0.70	0.76
0.55	0.75	50	380	1.85	3.6	2800	1.87	1.8	2.3	47	53	56	0.65	0.75	0.83
			400	1.85	3.8	2830	1.85	2.1	2.5	46	53	56	0.60	0.70	0.78
			415	1.90	3.9	2850	1.84	2.3	2.8	43	52	56	0.55	0.66	0.75
0.75	1.0	50	380	2.20	4.1	2810	2.55	2.3	2.3	54	61	63	0.64	0.75	0.82
			400	2.20	4.2	2835	2.52	2.5	2.5	54	61	63	0.58	0.70	0.78
			415	2.25	4.3	2850	2.51	2.9	2.8	52	60	63	0.54	0.65	0.74
1.1	1.5	50	380	3.00	4.6	2800	3.76	2.6	3.5	63	68	69	0.64	0.76	0.83
			400	3.00	4.7	2830	3.73	2.8	3.8	60	66	68	0.60	0.71	0.79
			415	3.00	4.7	2845	3.71	3.0	3.9	59	65	68	0.55	0.67	0.75
1.5	2.0	50	380	4.00	4.4	2800	5.10	2.6	3.2	63	69	70	0.60	0.73	0.82
			400	4.10	4.5	2825	5.07	2.9	3.5	61	67	69	0.53	0.66	0.76
			415	4.30	4.5	2840	5.05	3.1	3.8	59	66	69	0.48	0.61	0.71
2.2	3.0	50	380	5.60	4.2	2800	7.51	2.2	2.9	69	73	74	0.60	0.73	0.82
			400	5.70	4.3	2820	7.45	2.5	3.1	67	72	74	0.52	0.66	0.76
			415	6.00	4.3	2835	7.44	2.7	3.2	64	70	73	0.46	0.60	0.71
3.0	4.0	50	380	7.40	4.5	2780	10.30	2.5	2.8	73	74	75	0.59	0.73	0.83
			400	7.50	4.6	2810	10.18	2.7	3.2	69	73	74	0.51	0.66	0.78
			415	7.90	4.8	2825	10.16	3.0	3.4	66	72	73	0.47	0.60	0.72
4.0	5.5	50	380	9.60	5.1	2800	13.62	2.8	2.9	77	79	79	0.57	0.72	0.82
			400	9.80	5.1	2820	13.53	3.1	3.1	74	78	78	0.50	0.64	0.77
			415	10.3	5.1	2835	13.48	3.4	3.2	70	76	77	0.45	0.59	0.71
5.5	7.5	50	380	12.6	5.2	2825	18.60	2.5	2.7	79	80	80	0.63	0.77	0.86
			400	12.5	5.4	2845	18.44	2.7	2.8	77	80	80	0.55	0.71	0.82
			415	12.8	5.4	2860	18.37	2.9	3.0	74	79	79	0.50	0.65	0.78
7.5	10.0	50	380	16.9	5.1	2810	25.50	2.4	2.5	80	80	80	0.65	0.79	0.87
			400	16.9	5.3	2835	25.26	2.6	2.6	78	80	80	0.57	0.72	0.83
			415	17.3	5.3	2850	25.05	2.7	2.7	75	79	79	0.51	0.66	0.77

PERFORMANCE DATA V 380 Hz 60

Power		Hz	Voltage	RIA(*)	LRC / RLC	R.p.m.	FLT	LRT / FLT	BDT / FLT	Efficiency η%			Power factor cosφ			S.F. Amp
KW	HP		V			Min-1	Nm			50	75	100	50	75	100	
0.37	0.50	60	380	1.6	5.6	3500	1.01	4.3	4.7	36	45	50	0.57	0.64	0.70	2.0
0.55	0.75	60	380	2.1	6.0	3500	1.52	4.1	4.6	44	53	59	0.57	0.65	0.72	2.5
0.75	1.0	60	380	2.5	5.1	3480	2.06	3.2	3.6	51	59	63	0.57	0.67	0.75	3.0
1.1	1.5	60	380	3.2	5.8	3470	3.03	3.3	3.2	59	66	69	0.58	0.69	0.76	3.8
1.5	2.0	60	380	4.4	5.3	3470	4.10	3.1	5.0	63	70	71	0.52	0.64	0.71	5.0
2.2	3.0	60	380	5.9	6.0	3470	6.06	3.4	4.1	71	76	77	0.61	0.64	0.74	6.4
3.0	4.0	60	380	8.2	6.0	3470	8.24	3.5	4.3	70	75	77	0.50	0.63	0.73	8.7
4.0	5.5	60	380	10.2	6.3	3450	11.0	3.5	4.0	74	78	80	0.54	0.67	0.76	11.4
5.5	7.5	60	380	13.0	6.5	3490	15.0	3.1	3.8	78	81	83	0.55	0.69	0.78	14.5
7.5	10	60	380	17.8	6.5	3480	20.6	2.9	3.3	77	80	81	0.57	0.71	0.80	19.4

THREE-PHASE

PERFORMANCE DATA V 220-230 Hz 60

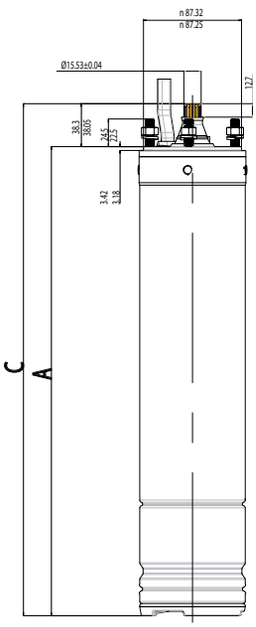

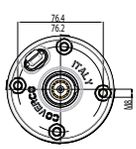

Potenza		Hz	Tensione	RIA(*)	LRC / RLC	Giri R.p.m. T:mn	FLT	LRT / FLT	BDT / FLT	Efficienza η%			Fattore di potenza cosφ			S.F. Amp
KW	HP		V			Min⁻¹	Nm			50	75	100	50	75	100	
0.37	0.50	60	220	2.6	5.1	3470	1.01	3.5	4.0	36	44	49	0.64	0.71	0.77	3.3
			230	2.6	5.2	3490	1.01	3.7	4.1	36	44	49	0.61	0.63	0.73	3.3
0.55	0.75	60	220	3.4	5.4	3480	1.51	3.3	3.9	44	52	57	0.62	0.71	0.77	4.2
			230	3.4	5.3	3500	1.50	3.4	4.1	43	51	56	0.58	0.67	0.73	4.1
0.75	1.0	60	220	4.1	5.0	3460	2.08	2.2	2.9	50	58	61	0.64	0.74	0.80	5.0
			230	4.1	5.1	3480	2.06	2.3	3.3	49	57	61	0.60	0.70	0.77	4.9
1.1	1.5	60	220	5.2	5.4	3450	3.05	2.9	5.8	62	67	70	0.62	0.73	0.80	6.3
			230	5.2	5.6	3470	3.05	3.0	5.8	60	65	70	0.59	0.70	0.77	6.1
1.5	2.0	60	220	6.9	5.3	3460	4.13	2.6	4.3	67	72	74	0.57	0.69	0.77	8.1
			230	7.0	5.9	3470	4.14	3.2	4.6	66	71	74	0.50	0.64	0.74	8.1
2.2	3.0	60	220	9.5	5.4	3440	6.10	3.3	3.7	77	79	80	0.54	0.68	0.77	10.6
			230	9.8	5.4	3460	6.20	3.6	4.2	74	78	79	0.47	0.62	0.73	10.6
3.0	4.0	60	220	14.2	6.0	3470	8.25	3.4	4.3	70	76	77	0.50	0.63	0.73	15.1
			230	15.1	6.2	3490	8.25	3.6	4.5	69	75	76	0.47	0.60	0.66	15.7
4.0	5.5	60	220	16.8	6.4	3450	11.1	3.1	3.4	76	79	80	0.58	0.71	0.79	18.5
			230	17.0	6.3	3460	11.0	3.3	3.6	73	78	80	0.51	0.64	0.75	18.6
5.5	7.5	60	220	21.0	6.4	3470	15.1	2.6	3.0	78	81	82	0.63	0.76	0.84	23.8
			230	21.1	6.4	3485	15.1	2.7	3.2	78	81	82	0.56	0.70	0.79	23.6
7.5	10	60	220	29.0	5.9	3440	20.8	2.6	2.6	78	79	80	0.64	0.78	0.85	32.6
			230	29.0	6.0	3460	20.7	2.8	2.8	76	79	80	0.58	0.72	0.81	32.0

RESISTANCE VALUES ± 5% (25 °C) SINGLE-PHASE V 220-230 Hz 50

TYPE	kW	Ω (Main)	Ω (Start)
NBS4 050 M	0.37	7.70	23.3
NBS4 075 M	0.55	5.35	18.8
NBS4 100 M	0.75	3.90	9.45
NBS4 150 M	1.10	2.65	8.25
NBS4 200 M	1.50	2.05	9.35
NBS4 300 M	2.20	1.42	3.75
NBS4K 500 M	3.70	1.15	2.35

LENGTHS AND WEIGHTS SINGLE-PHASE

TYPE	kW	Tot.A (mm)	Tot.C (mm)	Kg
NBS4 050 M	0.37	364	402	8.1
NBS4 075 M	0.55	389	427	9.2
NBS4 100 M	0.75	411	449	10.3
NBS4 150 M	1.10	434	472	11.4
NBS4 200 M	1.50	467	505	12.8
NBS4 300 M	2.20	565	603	17.4
NBS4K 300 M	2.20	565	603	17.4
NBS4K 500 M	3.70	680	718	24.1

RESISTANCE VALUES ± 5% (25 °C) THREE-PHASE V 380-415 Hz 50

TYPE	kW	Ω
NBS4 050 T	0.37	54
NBS4 075 T	0.55	40
NBS4 100 T	0.75	26.4
NBS4 150 T	1.10	16.1
NBS4 200 T	1.50	12.3
NBS4 300 T	2.20	8.3
NBS4 400 T	3.00	5.5
NBS4 550 T	4.00	3.8
NBS4 750 T	5.50	3.0
NBS4K 1000 T	7.50	2.2

LENGTHS AND WEIGHTS THREE-PHASE

TYPE	kW	Tot.A (mm)	Tot.C (mm)	Kg
NBS4 050 T	0.37	350	388	7.4
NBS4 075 T	0.55	364	402	8.0
NBS4 100 T	0.75	384	422	8.8
NBS4 150 T	1.10	411	449	10.1
NBS4 200 T	1.50	428	466	10.8
NBS4 300 T	2.20	467	505	12.5
NBS4 400 T	3.0	522	560	15.0
NBS4 550 T	4.0	587	625	18.3
NBS4 750 T	5.5	687	725	22.5
NBS4K 300 T	2.2	467	505	12.5
NBS4K 400 T	3.0	522	560	15.0
NBS4K 550 T	4.0	587	625	18.3
NBS4K 750 T	5.5	687	725	22.5
NBS4K 1000 T	7.5	768	806	28.3

MOTOR CUT-OPEN VIEW

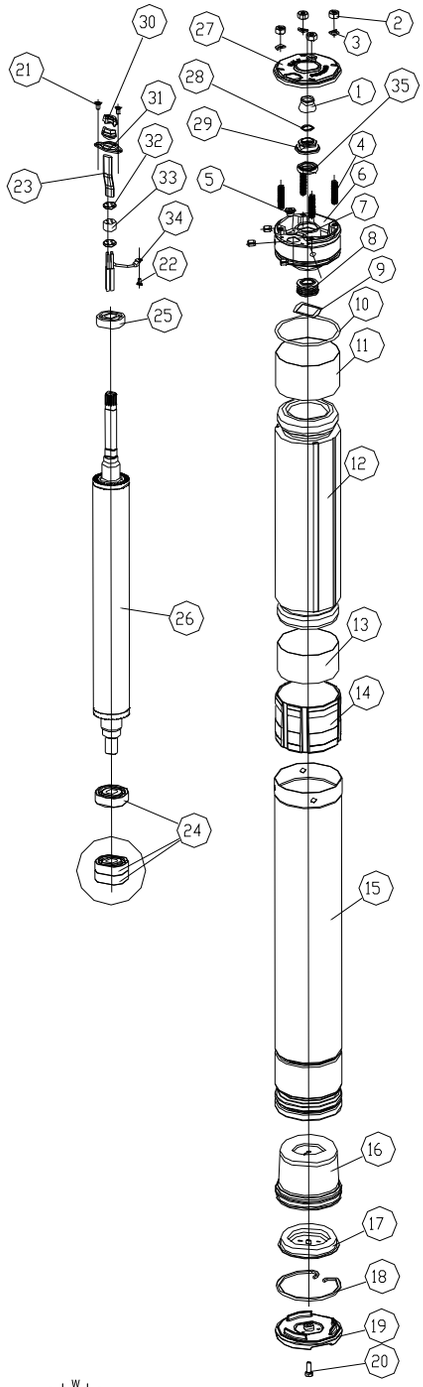

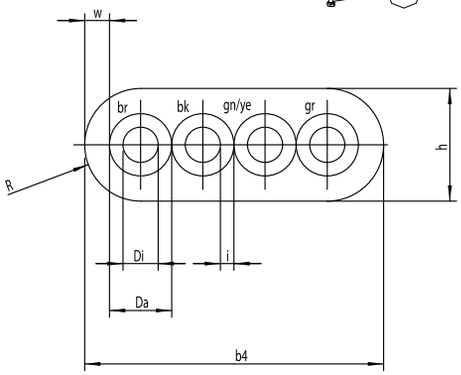

SPARE PARTS LIST

#	PART DESCRIPTION	Q.TY	#	PART DESCRIPTION	Q.TY
1	Sand slinger	1	19	Shell protector	1
2	Nut	4	20	Lock screw for shell protector	1
3	Washer	4	21	Screw for lead clamp	2
4	Stud	4		Grounding screw + lock washer	1
5	Oil fill plug	1	23	Lead	1
6	Top end bracket	1	24	Lower ball bearing	1
7	Lock pins	4	25	Upper ball bearing	1
8	Mechanical shaft seal	1	26	Rotor with shaft	1
9	Wavy spring	1	27	Top end bell cover	1
10	O-ring gasket for top end bell	1	28	Washer	1
	Insulation Roll up (11-13)	1	29	Sand slinger base	1
12	Wound stator	1		Lead seal bushing + Lead pressure disk + Lead fix rubber	1
14	Bottom end bell	1	31	Lead Clamp	1
15	Motor outer shell	1	35	Lip seal	1
16	Pressure equalization Diaphragm	1		Parallel connectors	3
17	Cover Diaphragm	1		Filling non-toxic oil Ondina 927	Kg.
18	Snap ring	1		Instruction sticker	1
				Lead jacket g6	4

CONSTRUCTION MATERIALS

#	STANDARD WATER	#	STANDARD WATER
1	Rubber	18	304 SS
2	304 SS	19	Lurynyl
3	304 SS	20	304 SS
4	304 SS	21	304 SS
5	Brass	22	304 SS
6	Cast iron	23	Rubber/ Copper wire
7	304 SS	24	Hardened steel
8	Nitrile-Carbon and ceramic face seal	25	Hardened steel
9	Hardened steel	26	Steel/304 SS
10	NBR	27	304 SS
11	Nomex-Mylar	28	304 SS
12	Copper wire	29	Hostaform
13	Nomex-Mylar	30	Nylon
14	Aluminium	31	304 SS
15	304 SS	32	Polypropylen
16	Rubber	33	Buna N
17	304 SS	34	Copper
		35	NBR

MOTOR LEADS

Typ	Di	i	Da	w	R	b4	h
4x1.5	1.5	0.6	2.7	1.9	2.5	14.6	5.1

NBS6 SERIES

SUBMERSIBLE MOTORS 6" OIL-FILLED

TECHNICAL DETAILS

NBS6 PRODUCT INTRODUCTION

The NBS6 submersible motors are 6" rewindable submersible motors which are suitable for water wells which max. temperature is 30°C and which pH is between 6.5 and 8.0. The filling liquid is a non-toxic dielectric fluid, which is approved by the F.D.A. (Food and Drug Administration) as well as by other various institutes of pharmacology world-wide. The coupling dimensions and flange comply with NEMA 6" standards, as these submersible motors are designed for driving 6" borehole (deep well) submersible pumps that are in accordance with 6" NEMA standards. Usually the submersible motors are installed vertically. However, the motors may be installed horizontally provided technical approval for each specific application. The 6" submersible motors can be installed in boreholes up to 350 m deep. Rewindability is assured by a design which enables the easy dismantling and assembly of the motors.

APPLICATION

These motors are built for dependable operation in 6" diameter or larger water wells. Oil lubricated thrust and radial bearings enable a maintenance free operation. A special diaphragm ensures pressure compensation inside the motor.

PRODUCT ADVANTAGES

- Wound stator submerged in oil.
- Cable material according to drinking water regulation (KTW)
- Sand slinger and shaft seal for high performance in sand
- High efficiency electrical design for low operation cost
- All motors prefilled and 100% tested

STANDARD SPECIFICATION

- 4,0 up to 30 kW
- 6" NEMA flange
- Protection: IP 68
- Starts per hour: 20
- Installation: vertical (all ratings) and horizontal until 11 kW (the application must be first analysed and approved by Coverco technical dept.)
- Standard voltage: 380-415V / 50Hz, 460V / 60Hz
- Voltage tolerance: 440 V-342 V
- Cable dimensions: 4 mm^2 and 8.4 mm^2
- Motor protection: Select thermal overloads according to DIN 60947-4-1, trip class 10 or 10A,trip time < 10 s. at 5 x IN
- Insulation: Class F
- Cooling flow: min. 16cm/sec (30kW min. 0,5m/sec)
- Removable flat cable (4m)

OPTIONS

- Other voltages
- Special lead lengths up to 50m
- YΔ - start (pos. of cables 90°)
- Mechanical Seal made in Silicon Carbide

THREE-PHASE

PERFORMANCE DATA V 380-415 Hz 50

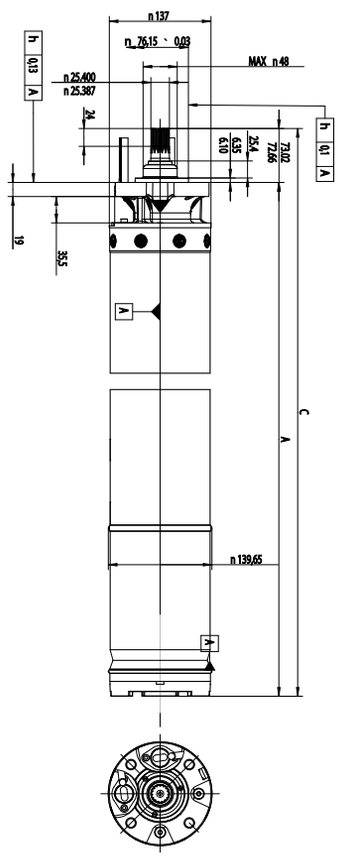

Rating		Hz	Voltage	RIA(*)	R.p.m.	Efficiency η%	Power factor cosφ	Thrust load
KW	HP		V		Min⁻¹	50	50	
4.0	5.5	50	380	9.6	2815	76	0.85	10000
			400	9.5	2840	76	0.81	
			415	9.6	2855	76	0.77	
5.5	7.5	50	380	12.9	2830	79	0.84	10000
			400	13.5	2850	79	0.79	
			415	13.2	2865	79	0.75	
7.5	10	50	380	17.1	2810	79	0.86	10000
			400	16.8	2835	79	0.82	
			415	17.1	2850	79	0.78	
9.2	12.5	50	380	20.8	2830	81	0.84	10000
			400	20.9	2850	81	0.80	
			415	21.5	2865	81	0.75	
11	15	50	380	24.5	2880	85	0.81	10000
			400	25.3	2895	85	0.75	
			415	26.6	2905	84	0.70	
15	20	50	380	33.0	2850	84	0.84	10000
			400	33.4	2875	84	0.79	
			415	34.7	2880	84	0.73	
18.5	20	50	380	40.1	2850	85	0.84	10000
			400	40.7	2870	85	0.79	
			415	42.1	2880	84	0.73	
22	30	50	380	50.3	2875	86	0.79	20000
			400	53.3	2890	85	0.71	
			415	57.6	2900	84	0.64	
30	40	50	380	63.2	2830	83	0.88	20000
			400	61.9	2850	84	0.85	
			415	62.2	2865	84	0.81	

PERFORMANCE DATA V 460 Hz 60

Power		Hz	Voltage	RIA(*)	R.p.m.	Efficiency η%	Power factor cosφ	Thrust load
KW	HP		V		Min⁻¹	50	50	
4.0	5.5	60	460	10	3440	71	0.84	10000
5.5	7.5	60	460	13.6	3450	74	0.81	10000
7.5	10	60	460	16.8	3445	78	0.84	10000
9.2	12.5	60	460	21.3	3465	78	0.82	10000
11	15	60	460	24.9	3500	83	0.80	10000
15	20	60	460	33.5	3485	82	0.81	10000
18.5	25	60	460	40.5	3470	82	0.82	10000
22	30	60	460	50.5	3490	84	0.76	20000
30	40	60	460	60.4	3435	85	0.86	20000

LENGTHS AND WEIGHTS THREE-PHASE

TYPE	kW	HP	A (mm)	Kg	Oil Q.ty
NBS6 550 T	4.0	5.5	633	34	2.50
NBS6 750 T	5.5	7.5	667	36	2.60
NBS6 1000 T	7.5	10.0	698	39	2.70
NBS6 1250 T	9.2	12.5	731	42	2.75
NBS6 1500 T	11.0	15.0	826	50	2.90
NBS6 2000 T	15.0	20.0	894	57	2.95
NBS6 2500 T	18.5	25.0	959	65	3.20
NBS6K 3000 T	22.0	30.0	1116	87	3.60
NBS6K 4000 T	30.0	40.0	1243	91	3.80

MOTOR CUT-OPEN VIEW

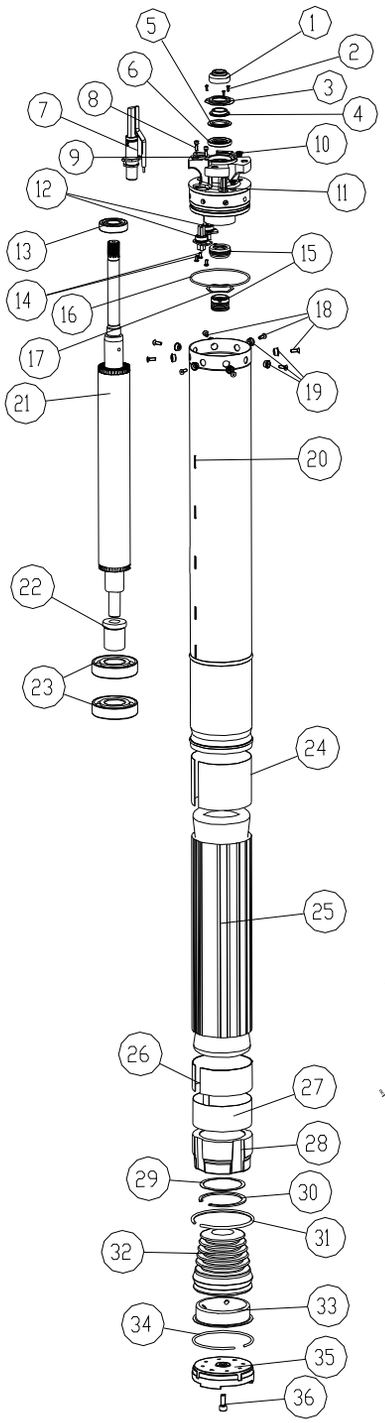

SPARE PARTS LIST

#	PART DESCRIPTION	Q.TY	#	PART DESCRIPTION	Q.TY
1	Slinger	1	20	Shell	1
2	Screw (cover seal)	1	21	Rotor	1
3	Cover seal	1(10000 N) 2 (20000 N)	22	Bushing bearing	2
4	Bushing	1	23	Bearing (bottom)	1
5	Distance ring	1	24	Insulation (top)	1
6	Lip seal	1	25	Wound stator	1
7	Removable lead (4X4 or 4x8)	1DOL 2SD	26	Insulation (bottom)	1
8	Screw (lead)	4	27	Spacer ring (bottom)	2
9	Cable clamping	1DOL 2SD	28	Bottom end bell	1
10	Plug	1DOL 2SD	29	Shim ring	1
11	Top end Bell	1	30	Retainer ring	1
12	Prong	1	31	Stator lock ring	1
13	Bearing (top)	1	32	Diaphragm	1
14	Screw (prong)	1	33	Diaphragm cover	1
15	Mechanical seal	1	34	Diaphragm lock ring	1
16	O-ring	1	35	Protection cover	1
17	Compensation ring	1	36	Hexagonal head screw	1
18	Flat head screw	1		Safety instruction card	1
19	Lock washer	1		Oil Primol 352	Kg.

CONSTRUCTION MATERIALS

#	STANDARD WATER	#	STANDARD WATER
1	Nitrile	19	304 SS
2	304 SS	20	304 SS
3	304 SS	21	Steel
4	Bronze	22	C40(1.0765)
5	POM	23	Steel
6	Nitrile	24	Nomex-Mylar
7	EPR (blue)	25	/
8	304 SS	26	Steel
9	304 SS	27	420 SS
10	Brass	28	Cast iron
11	Cast iron (powder coated)	29	Steel
12	PEI	30	Steel
13	Steel	31	302 SS
14	304 SS	32	Neoprene
15	Carbon/graphite + Alumina oxide + nitryle	33	304 SS
16	NBR	34	304 SS
17	Steel C67	35	Noryl
18	304 SS	36	304 SS

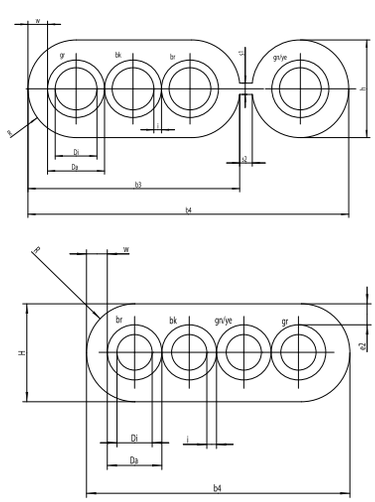

MOTOR LEADS

Typ	Di	i	Da	w	R	s1	s2	b3	b4	h	Motor		
	mm	mm	mm	mm	mm	mm	mm	mm	mm	mm	380-415V 50Hz	220-230V 60Hz	380V 60Hz
4G4 (L=4m)	2.54	0.7	3.94	1.5	3.5	-	-	-	19.0	7.0	4-22kW DOL 4-30kW YD	4-11kW DOL 4-30kW YD	4-22kW DOL 4-30kW YD
3x8+1G8 AWG (3x8.4+1x8.4)	3.84	0.7	5.24	1.8	4.5	1.0	1.1	19.5	29.5	8.9	30kW DOL	4-11kW DOL 4-30kW YD	30kW DOL

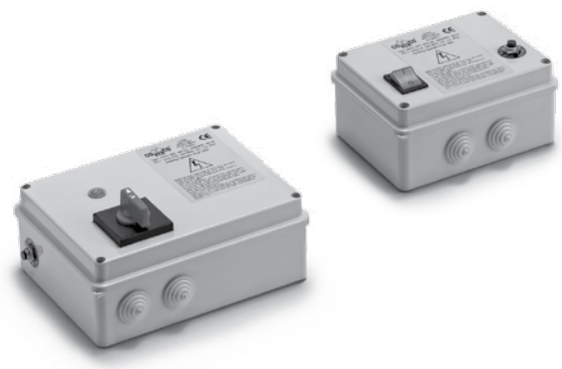

COV-BOX M SERIES

CONTROL BOX FOR SINGLE PHASE SUBMERSIBLE MOTORS 220-240 V 50-60 Hz

IN CONFORMITY WITH IEC EN 60439-1 RULES

PRODUCT INTRODUCTION

These control boxes are very simple in their construction, but they are much required in the market thanks to their competitive prices. They are equipped with connection details, a run capacitor, protection overload and relay which protect the motor from overtemperature.

TECHNICAL FEATURES

- Plastic box
- Run capacitor
- Thermal overload circuit brake with manual
- reset
- Connection terminal board
- Wiring diagram
- Protection IP 50
- Switch ON-OFF
- Pilot lamp

Rating		Type	Box	Overload protector Amp		Run capacitor mF		Start capacitor mF	
kW	HP	COV-BOX M		50 Hz	60 Hz	50 Hz	60 Hz	50 Hz	60 Hz
0.37	0.50	50	M	5	6	20	20	-	-
0.55	0.75	75	M	6	8	25	31.5	-	-
0.75	1.00	100	M	8	10	35	31.5	-	-
1.10	1.50	150	M	10	13	40	40	-	-
1.50	2.00	200	M	13	16	50	50	-	-
2.20	3.00	300	L	18	18	76	76	-	-

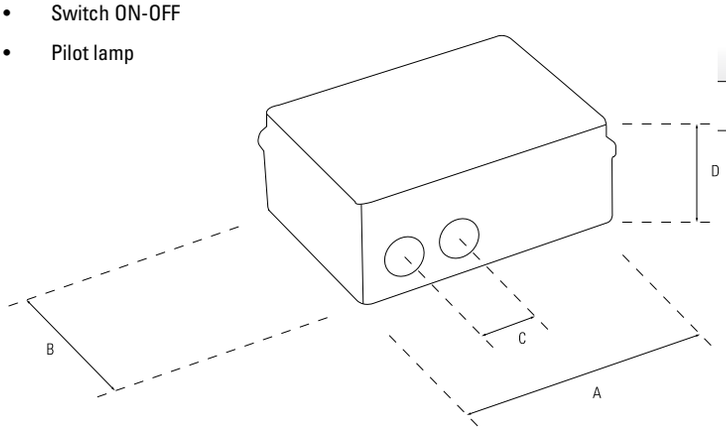

BOX	A	B	C	D
M	160	120	40	75
L	200	150	40	75

QC-AV/E SERIES

CONTROL BOX FOR SINGLE PHASE SUBMERSIBLE MOTORS 220-240 V 50-60 Hz

IN CONFORMITY WITH IEC EN 60439-1 RULES

PRODUCT INTRODUCTION

This type of singlephaase control boxes which has been producing since various years, ensure a total protection to the motor and at the same time, they support the starting thanks to their standard equipment based on a starting + run capacitors, an overload protector and a voltmetric relay. When compared to the base control box version of Coverco, the COV-BOX M, these boxes can enable the motor to start under low voltage or voltage drops.

TECHNICAL FEATURES

- Plastic box
- Start capacitor / disconnecting relay / potential relay /run capacitor
- Thermal overload circuit brake with manual reset
- Connection terminal board
- Wiring diagram
- Protection IP 50
- Switch ON-OFF / pilot lamp / Lightning arrester

Rating		Type	Box	Overload protector Amp		Run capacitor mF		Start capacitor mF	
kW	HP	QC-AV/E		50 Hz	60 Hz	50 Hz	60 Hz	50 Hz	60 Hz
0.37	0.50	50	M	5	6	20	20	43-56	43-56
0.55	0.75	75	M	6	8	25	31.5	43-56	43-56
0.75	1.00	100	M	8	10	35	31.5	43-56	43-56
1.10	1.50	150	M	10	13	40	40	43-56	43-56
1.50	2.00	200	M	13	16	50	50	43-56	43-56
2.20	3.00	300	L	18	18	76	76	130-156	130-156
3.70	5.00	500	XL	30	30	130	150	130-156	130-156

BOX	A	B	C	D
M	200	150	40	75
L	255	200	40	100
XL	315	235	40	125

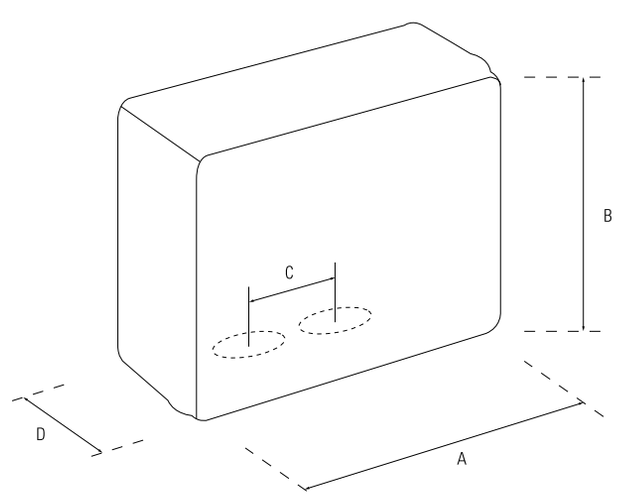

COV-BOX T SERIES

CONTROL BOX FOR THREE PHASE SUBMERSIBLE MOTORS 380-415 V 50 Hz

IN CONFORMITY WITH IEC EN 60439-1 RULES

PRODUCT INTRODUCTION

These are specific control boxes born to control and protect the three-phase Coverco 4'' motors during their operation from2.2kW up to 7.5kW. They are built on 100% original materials and are recognised to be very researched by professional customers who want to have the best to protect their motors from misfunction.

TECHNICAL FEATURES

- Plastic white box (310x230x115)
- Metal zinc coated plate for grounding
- General isolating switch with locking door
- Transformers P400V S 24V 50VA + faston for auxiliary circuits
- Line counter with thermal relay + adjustable scale and internal set
- Protection cutout (fuses) for motor and auxiliary circuits
- Green lamp indicating motor running, orange for thermal lockout
- Low voltage entry for float ball or pressure cut-off
- Cable gland PG 13.5 with maxiblock closing collar
- Coverco brand sticker
- Invidual avana colour cardboard box
- Every control box gets a functional test and also a test of electric strength

BOX	A	B	C	D
XL	250	200	40	115

Rating		Type	Box	Ampère-meter protection	Fuses for motor start-ing
kW	HP	COV-BOX T		50 Hz	50 Hz
0.37	0.50	50	XL	1.0 - 1.6	2
0.55	0.75	75	XL	1.8 - 2.7	2
0.75	1.00	100	XL	1.8 - 2.7	4
1.10	1.50	150	XL	2.7 - 4.0	4
1.50	2.00	200	XL	4.0 - 6.0	6
2.20	3.00	300	XL	6.0 - 9.0	8
3.00	4.00	400	XL	6.0 - 9.0	10
4.00	5.50	550	XL	9.0 - 12.5	12
5.50	7.50	750	XL	12.5 - 17.5	16
7.50	10.00	1000	XL	16.0 - 24.0	20

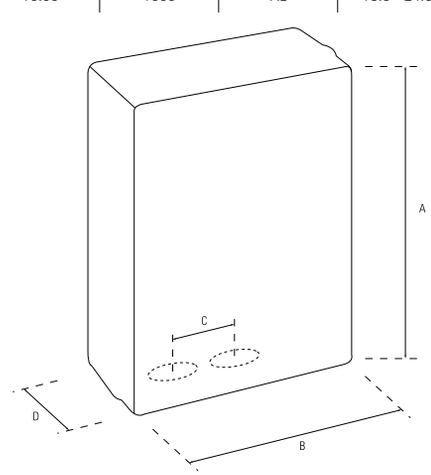

ART DIRECTOR: Francesco Maria Paolini/Intermedia Design (Motta di Livenza - TV)
DESIGNER: Francesco Maria Paolini/Intermedia Design (Motta di Livenza - TV)
PHOTOGRAPHERS: © Luigi Dezotti
COPYWRITING: Marketing Dept./Coverco srl
PRINTMAKER: Imprimenda (Limena - PD)

Via Magnadola, 29
31045 - MOTTA DI LIVENZA - TV
Tel +39-0422-7616 - Fax +39-0422-861668
E-mail: info@coverco.com

(Rev. 01/10)